A description is presented of the functions and design of a computer-controlled system of four, interlinked, cryogenic, fractional distillation columns capable of separating a feed-stream of mixed isotopes (hydrogen, deuterium, and tritium) into four high-purity product streams needed in the development of a D-T fueling system for fusion power reactors. The packed columns, each 19-38 mm id by 3.2-4.1 m high and together served by a single 450 W, 20 K refrigerator, are sized to process a feed of 360 g mol day^{-1} of nominally 50-50 D-T, but containing all six diatomic isotopic species. The system also contains two room temperature catalytic equilibrators for promoting the reversible reaction: $HT + D_2 \leftrightarrows HD + DT$. Full-scale system tests are scheduled for 1980.

Hydrogen isotope distillation for fusion power reactors

J.R. Bartlit, R.H. Sherman, R.A. Stutz and W.H. Denton

The tritium systems test assembly

A project is underway at the Los Alamos Scientific Laboratory (LASL) to develop and demonstrate the technology needed for handling the deuterium-tritium (D-T) fuel in a fusion power reactor.[1] Called the Tritium Systems Test Assembly (TSTA), the project is funded at $13.4 million and is scheduled to have the integrated systems operational by mid-1981. The main TSTA processes include the following:

1. a vacuum system for evacuating from a mock reaction chamber the mixture of 'unburned' D-T fuel, helium 'ash', and impurities of tritiated compounds of C, O, N, and H;
2. a fuel cleanup system to separate and detriate these impurities;
3. an isotope separation system, which is the main subject of this paper;
4. an impurity simulation system to introduce impurities typical of fusion power reactors; and
5. a fuel injection system to feed the appropriate (approximately 50-50) D-T mix to the mock reactor.

Important associated equipment includes transfer pumps for tritium service, a computer for monitoring and control of the processes, gas analyzers, an emergency system for removal of tritium from room air, and a waste treatment system for routinely collecting tritium from gaseous effluents.

This paper will discuss the isotope separation system (ISS), its functions, how the process was selected and designed, the final design, and its interface with a central computer control unit.

The isotope separation (iss)

Functions The ISS has four principal duties. From a purified stream of 360 g moles day^{-1} of mixed hydrogen isotopes, consisting nominally of equimolar quantities of deuterium (D) and tritium (T) with low levels (1%) of hydrogen (H) impurity, the ISS provides four product streams, namely:

1. an essentially tritium-free stream of H_2 and HD wastes for disposal to the atmosphere;
2. a high-purity stream of D_2, a stream needed by fusion reactors for refueling and plasma heating by injection as a neutral beam;
3. a stream of basically pure DT for refuelling; and
4. a high-purity stream of T_2 for refuelling and for studies on properties of tritium and effects of tritium on materials.

Secondary duties of the ISS include: processing of the relatively pure D_2 return from a simulated neutral beam line; and processing of electrolytic hudrogens generated in the fuel cleanup system. The functions of the ISS are summarized in Fig. 1.

The ISS must perform all of the above separations continuously and reliably over the long periods of time typical of commercially operating power reactors.

Selection of distillation for the isotope separation process. After evaluating previous work on the separation of hydrogen isotopes, cryogenic fractional distillation was selected as the best process for making the required separations. In the late 1940s and early 1950s studies by the US Atomic Energy Commission on separating deuterium from hydrogen for

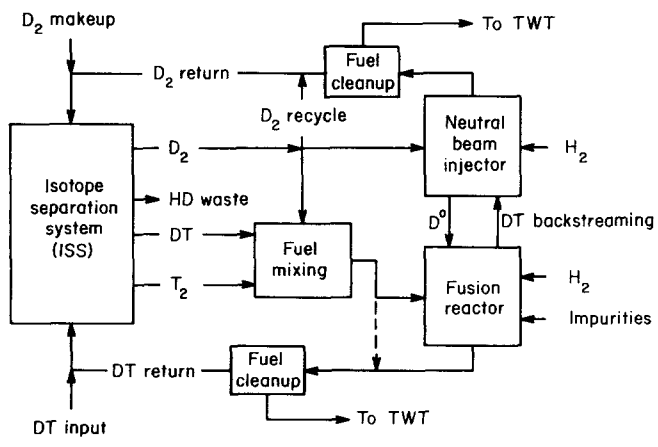

Fig. 1 Functions of isotope separation system (ISS)

JRB, RHS and RAS are at Los Alamos Scientific Laboratory, Los Alamos, New Mexico 87545 and WHD is at AERE, Harwell, UK.
Received 4 December 1978.

 0011-2275/79/050275-05 $02.00 © 1979 IPC Business Press

heavy water production[2,3] concluded that cryogenic distillation was an attractive choice because of its advantages of relatively large separation factors, low power consumption, high throughputs, relatively short start-up times, and flexibility of design. A plant was designed[4] but never built in the US, but similar plants were built in both France[5,6] and Russia.[7] In the 1960s and 1970s, interest arose in separating tritium from isotopic mixtures for recovering tritium or reducing contamination. Again, cryogenic distillation proved attractive. A batch still for tritium recovery was built in 1966 at Savannah River Plant and a multicolumn, continuous still was built in 1971 at L'Institut Max Von Laue-Paul Langevin in Grenoble, France.[8,9] Thus, in addition to the advantages found previously, the advantages of building on existing commercial experience were considered in the selection of cryogenic distillation.

Design considerations and methods A system of four distillation columns, is in general, required to produce four products of specified purity from a multicomponent mixture. In addition, comparison of the feedstream with the four desired product streams reveals one component, HT, in the feedstream which is not desired in any product stream. It is desired to discard the H, tritium-free, to the environment and retain the T in the system. Thus, HT molecules must be split, which obviously cannot be done by distillation alone. Destruction of HT molecules is accomplished by the two catalytic, room-temperature equilibrators shown in Fig. 2, which destroy HT in the presence of large quantities of D_2 by promoting the reversible reaction: $HT + D_2 \rightleftarrows HD + DT$. Thus, the total separation scheme consists of six elements, four cryogenic distillation columns plus two room-temperature equilibrators.

A special facet of the project is presented by the involvement of tritium, and, in particular, three unique characteristics of tritium: namely, its radioactive hazard (9720 Ci/g), radioactive heat of decay (0.324 W/g), and cost ($10 000/g on the commercial market). As a result of these characteristics, the tritium inventory becomes a proper design consideration. Because distillation treats fluids in a condensed state, a majority of all process tritium (100 g out of 170 g total) in TSTA resides in the ISS. Even though the purpose of TSTA is to demonstrate the safe handling of tritium in 100+ gram

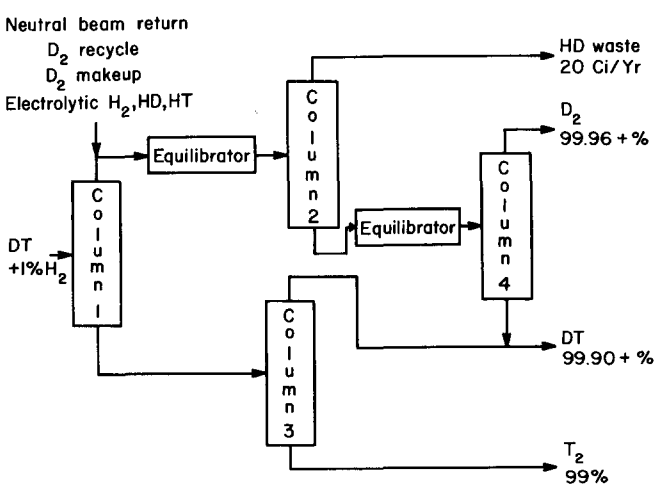

Fig. 2 Flow schematic and product streams from ISS

quantities rather than the minimization of tritium inventory, an understanding of the functional dependence of tritium inventory on various design parameters in an important goal of the project. As shown in Table 1, the tritium inventory in the ISS is mainly in Columns 1 and 3 and, therefore, depends on the size of these columns.

A key element in reducing the size of Column 1 is the 'D_2-recycle' stream shown in Figs. 1 and 2. This stream provides the excess quantities of D_2 needed to drive the equilibrators without necessitating an increase in the size of Column 1 to produce the excess from the primary feed stream. In a commercial fusion power reactor, this scheme could be carried even further than it was in the developmental columns, but with a loss of flexibility that would be undesirable in a developmental system.

Computer code for multicomponent, fractional distillation design To meet the needs of mainly the petroleum industry, numerous computer codes have been developed to make design calculations for the fractional distillation of multicomponent mixtures. Through the generosity of Professor Donald Hanson at the University of California, Berkeley, such a code was made available. This code, based on a method described in the literature,[10] was modified by one of us (RHS) for use with hydrogen isotopes, including tritium, by incorporating a number of special features, as follows:

1. the actual molal heats of vaporization were used instead of the usual assumption of equal molal heats and equal molal overflows within columns;
2. provision was made to allow both a constant and a composition dependent addition (or subtraction) of heat on any theoretical separation plate; this permitted proper accounting for the radioactive heat of decay of tritium ($0.324\,W\,g^{-1}$);
3. Experimentally determined values (see the following section) were used for relative volatilities of the three principal isotopic types – D_2, DT, and T_2;
4. experimentally determined values (see the following section) were used for the separating efficiency or Height Equivalent to a Theoretical Plate (HETP) of specific volumn packings for the isotopic mixtures;
5. an important design consideration, tritium inventory was computed from compositions on each plate, summed, and printed out.

The design code can treat columns having multiple feed streams, but does not treat multiple, interlinked columns together as a system. Interlinking the columns was done by hand for TSTA.

Experimental determination of design parameters Because only limited data were available for tritium systems, laboratory measurements were made to determine two of the key design parameters on which the least information was available, namely, the relative volatilities for $D_2/DT/T_2$ and the separating efficiency (measured at HETP) of commercial distillation column packings. Values of the relative volatility were measured for D_2/DT and for D_2/T_2[11] and were found to lie about 5% below the ideal values computed as the ratio of the vapour pressures of the pure components.

The separating efficiency (or Height Equivalent to a Theoretical Plate-HETP) of a packed distillation column was measured in the laboratory in a small, prototype column (9.5 mm id x 457 mm packed height) using two different types of commercial packing. The results indicated values of HETP of 50 ± 5 mm. A value of 50 mm was used in the process design calculations. Also for design calculations, an allowable vapour velocity of 89 mm s^{-1} was used, which was consistent with laboratory results and results from other sources.

The final process design By means of the computer code and use of the laboratory data, a four-column distillation process was designed to accomplish the desired separations. The resulting system is depicted in Figs 2 and 3. The column specifications are summarized in Table 1.

A significant result of the computer predictions of column operation is that the liquid flows in the stripping section of Columns 1 and 3 decrease to almost dryness as a result of the heat of decay tritium. In some cases this can be compensated for by increased reflux and flow in the rectifying section, but at the expense of greatly increased tritium inventory. An alternate solution, chosen here, is to provide cooling matched to remove the radioactive heat of decay as predicted, stage-by-stage, for the column. Also added were alternate feed taps, one or two per column, to provide increased flexibility of operation. Additionally, two more taps were added to Column 1 for fluid sampling within the column. These samples, together with those from the alternate feed taps, will permit diagnostic measurements to verify the computer predictions of column performance.

Table 1. Final design specifications of the ISS

	Column packed height, m	Column inside diameter, mm	Refrigeration at 20 K, W	Tritium inventory, g
Column 1	4.11	29.0	38.6	34.3
Column 2	4.06	19.0	18.2	0.1
Column 3	3.20	23.2	24.1	57.5
Column 4	4.11	38.0	64.6	10.3
Over-all total	5.5[a]	711,0[a]	145.5[b]	102.2[c]

a — outer vacuum shell, b — excluding heat leak, c — including reboilers

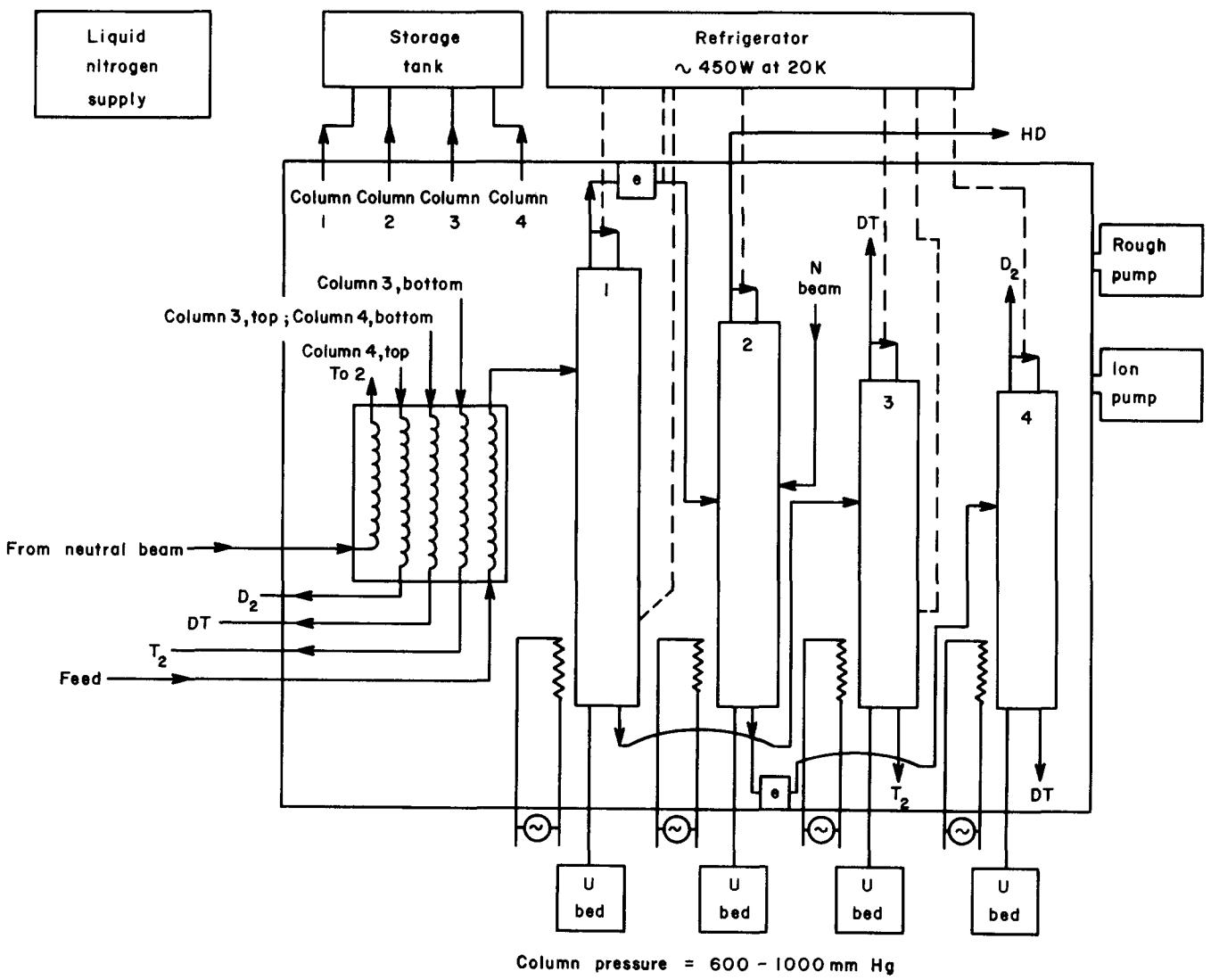

Fig. 3 Flow scheme and cryogenics in ISS

The four columns, together with redundant instrumentation, necessary interconnecting and refrigeration piping, and a thermal shield at 77 K, are enclosed in a single, stainless steel, vacuum shell, which also serves as secondary containment for the process tritium. This unit, plus the necessary cryogenic refrigerator, will be supplied and tested commercially by Arthur D. Little, Inc. (Cambridge, MA 02140) at a cost of about $1.15 million, with installation at TSTA scheduled for 1980.

Computer interface and control The control computer system (CSS) is designed as a modular redundant system. This is so the control and data acquisition functions of the two Eclipse C/330, two micro CPUs, two 192-megabyte dual ported disk and two-floppy disks can be shared. In instances of the malfunctions of any one or more units, the TSTA system can continue safe operation. This redundant network is required for the system to be highly reliable and fault tolerant.

The major components of the TSTA computer control system along with the logic data paths are shown in Fig. 4. The 16 operating modes for the network, ranging from completely normal operation to total loss of computer control, are shown in Fig. 5. The redundant, fault tolerant nature of the TSTA computer system is clearly shown by this figure. Ten operation modes represent normal operation of the control and data acquisition functions of the TSTA computer system, five modes require controlled shutdown and one mode results in total loss of computer control, with manual shutdown required.

The primary purposes of the control system are to measure accurately performance parameters and to provide control of components, subassemblies, and the TSTA loop as a whole; to assure adequate safeguarding and accountability of records of the large tritium inventory; and to provide alarms for 'out of limit' processes and conditions.

The secondary purposes of the control system are to: perform real-time data reduction and display; provide status of equipment via CRT graphics display; record all monitored information as a permanent data base; provide system simulation; develop software for control of TSTA; and provide graphic display of data via CRT with hardcopy capabilities.

The interface to the ISS will be through CAMAC, which is the interface standard used by TSTA for interfacing all control hardware to the computer system. Use of the CAMAC standard will allow use of equipment and software which has already been developed and tested. It will also allow devices developed for this system to be used in other systems. In addition, component and software development can proceed independently of the computer system used.

The ISS control system will be housed in CAMAC and will consist of a micro computer with floppy disks. The control subsystem approach is being used to allow the ISS suppliers to develop the software required to run and demonstrate the ISS in Fortran, which can be interfaced to the main software control system.

Dynamic simulation studies on the ISS have indicated that the system response time (time to reach steady state after a step change in feed conditions) is rather long, ~ 8 h for a single

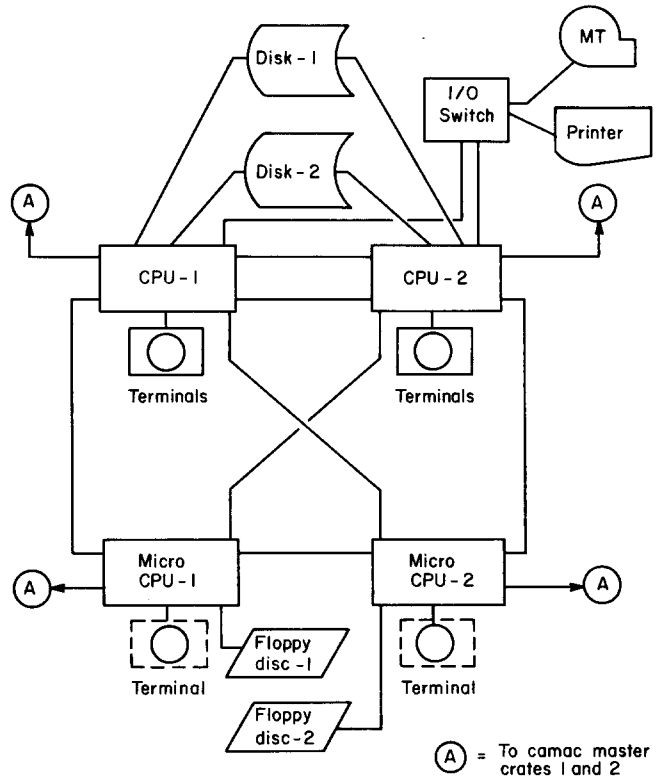

Fig. 4 Major components and data flow paths for CSS

column. As a consequence, feedback control alone appears sufficiently responsive to maintain all product compositions within specified limits. This eliminates need for using the more responsive, but more complex and more expensive, feedforward control, in which proper control changes are anticipated by using the computer in conjunction with real-time information on the compositions of intermediate product streams.

The control of the ISS subsystem will allow it to be run in a subcycle mode (stand alone) or as an integral part of the TSTA control loop. When the ISS subsystem is running as part of the control loop, the CSS will direct the ISS micro computer through the CAMAC interfaces. The direction will advise the ISS of changes in composition of the input or of changes in the flow rate of the input streams.

When the ISS subsystem is running in a subcycle mode, the CSS will continue to monitor the system, but will not intervene except to request a complete shutdown or to restart loop flow.

The ISS computer system will also allow, by way of a teletype (TTY) interface, the shutdown of the ISS or the changing of set points. All commands for the TSTA loop as well as the ISS will be through TTY interfaces in the computer control room.

We thank Professor D. Hanson, University of California, Berkeley, for sharing with us his knowledge and computer program for multicomponent distillation. We thank Dr W.R. Wilkes, of Mound Facility, for sharing his helpful ideas on alternative flow schemes. R.A. Briesmesiter made significant contributions in the laboratory measurement of relative volatilities and column efficiencies. Control concepts were evolved in helpful discussions with Arthur D. Little, Inc.

CPU's down / CPU	NONE	1	2	3	4	1,3	1,4	1,2	2,3	2,4	3,4	1,2,3	1,2,4	1,3,4	2,3,4	1,2 3,4
1	C	—	C	C	C	—	—	—	C	C	C	—	—	—	SD	—
2	DR	C	—	DR	DR	C	C	—	—	—	DC	—	—	SD	—	—
3	DC	DC	DC	—	DC	—	DC	SD	—	DC	—	—	SD	—	—	—
4	SS	DR	DR	DC	—	DC	—	SD	DC	—	—	SD	—	—	—	—
Operation state of system	FN	CN	CN	CN	CN	CN	CN	CSD	CN	CN	CN	CSD	CSD	CSD	CSD	MSD

Fig. 5 Operation of computer system under loss of CPUs C – control; DR – data reduction; DC – data collection; SS – system studies; SD – shutdown mode of operation for TSTA; FN – full normal; CN – control normal; CSD – controlled shutdown; MSD – manual shutdown

References

1 **Anderson, J.L.** The tritium systems test assembly at the Los Alamos Scientific Laboratory, Third ANS Topical Meeting on the Technology of Controlled Nuclear Fusion, Santa Fe, New Mexico, May 9–11 (1978)

2 **Murphy, G.M.** (ed) Production of Heavy Water, McGraw-Hill, New York (1955) 82-98

3 **London, H.** Separation of Isotopes, George Newnes Ltd, London (1961) 41–94

4 Hydrocarbon Research Inc, Final Report to US Atomic Energy Commission Low-Temperature Heavy Water Plant Contract No AT(30-1)-810, NYO-889, New York, New York (1951)

5 **Roth, E.** et al Production of Heavy Water in France, Proc Intern Conf Peaceful Uses At Energy, 2nd, Geneva, 1958, United Nations, Geneva, Paper P/1261 4 (1958) 499-521

6 **Akar, P., Simonet, G.** Heavy water by distillation of liquid hydrogen ibid, Paper P/2538 (1958) 522-526

7 **Malkov, M.P.** et al Industrial Separation of Deuterium by Low-Temperature Distillation ibid, Paper P/2323 491-498

8 **Damiani, M., Getraud, R., Senn, A.** Tritium and hydrogen extraction plants for atomic power reactors, Sulzer Technical Review, Special Number 'Nuclex 72' (1972) 41-45

9 **Pautrot, Ph., Arnauld, J.P.** The tritium extraction plant of the Laue Langevin Institute *Am Nuc Soc Trans* **20** (1975) 202-205

10 **Ricker, N.L., Grens, E.A.** II, 'A Calculational Procedure for Design Problems in Multicomponent Distillation' AICHE Journal **20** (1974) 238-244

11 **Sherman, R.H., Bartlit, J.R., Briesmeister, R.A.** Relative volatilities for the isotopic system deuterium-deuterium tritide-tritium *Cryogenics* (1976) 611-613