Fusion Engineering and Design 12 (1990) 393–402
North-Holland

THE TRITIUM SYSTEMS TEST ASSEMBLY AT LOS ALAMOS NATIONAL LABORATORY *

John R. BARTLIT

Materials Science and Technology Division, Tritium Science and Technology Group, Los Alamos National Laboratory, Los Alamos, NM 87545, USA

Submitted 2 October 1989; accepted 2 November 1989
Handling Editor: R.W. Conn

The Tritium Systems Test Assembly (TSTA) at Los Alamos National Laboratory is a facility for the integrated testing, in full scale, of the processes and safety systems required for the reprocessing and recycling of plasma exhaust gas from a tokamak reactor. The facility can reprocess and reuse tritium at the rate of 1000 g per day, with a tritium inventory of 130 g. TSTA has been operated since 1984 with increasing amounts of tritium and an increasing degree of system integration without significant releases to the environment or doses to workers. Full loop integration was achieved in 1988. Since 1987, the TSTA has been jointly funded and jointly operated by the U.S. Department of Energy and the Japan Atomic Energy Research Institute. Objectives include: the demonstration of long-term reliability and safety, the qualification of equipment for tritium service, and the verification of a facility that can be copied for future fusion machines, such as the International Tokamak Experimental Reactor (ITER). Future plans include the installation and integrated testing of a new impurity removal system of Japanese design, testing the effect on the plasma exhaust gas reprocessing systems of off-normal conditions in the torus, and the development and testing of technology for processing tritium contained in a breeding blanket product stream.

1. Introduction – The reasons for TSTA, its timing, and configuration

In May of 1976, the U.S. Department of Energy (DOE) Office of Magnetic Fusion Energy (MFE) issued a solicitation for proposals to build and operate a facility to develop and demonstrate the tritium fuel handling technology needed for future tritium-burning fusion reactors. The solicitation was general in nature to allow the proposers to shape the project as they saw fit. A half dozen proposals were received from DOE laboratories.

The Tritium Systems Test Assembly (TSTA) at the Los Alamos National Laboratory is the result of the DOE solicitation. In broadest terms, the TSTA is characterized by being an integrated operation of all the plasma exhaust gas reprocessing subsystems, and by being a full-scale test facility. The tritium inventory is about 120 grams and the processing rate is 1000 grams of tritium per day – nearly full flow for a fusion device the size of the International Tokamak Experimental Reactor (ITER).

The DOE solicitation and the project took the direction it did at the relatively early date it did for several reasons. The aim was not only to develop the tritium technology that would be needed, but also to demonstrate that the technology could be operated safely over long periods of time. It was realized early on that licensers and the public probably would require more than calculated assurances that tritium could be handled safely in a fusion operating environment. The idea was not to minimize tritium inventories and their handling, but rather to show that full inventories could be handled in situations duplicating, to the maximum extent, those expected in the early tritium-using fusion devices. And to do so while maintaining minimal releases to the environment and doses to workers.

A strong base of tritium technology existed in 1976, certainly a base sufficient for the design of the needed reprocessing systems. Even so, it was expected that further developments and improvements would result from the integrated testing. In some cases, the need for

* This work is supported by the Office of Fusion Energy, U.S. Department of Energy, and the Japan Atomic Energy Research Institute.

0920-3796/90/$03.50 © 1990 – Elsevier Science Publishers B.V. (North-Holland)

improvements would only be shown by integrated testing. A peculiar and fortunate characteristic of fusion tritium systems made it feasible to initiate integrated operations knowing that some system designs might need later modification.

That fortunate characteristic is that the full size tritium systems are in general quite small. Process lines to carry a kilogram of tritium a day are 1/4 inch (6.4 mm) in diameter. With the exception of the cryogenic distillation columns, process components can be easily removed, replaced, redesigned, and replumbed without large expense. The full-scale TSTA is inherently a size usually considered in chemical engineering to be bench-scale or pilot-plant size.

The final fortunate circumstance that permitted the early construction of plasma exhaust reprocessing systems in a fusion-relevant configuration is that these systems are outside the neutron environment in a working fusion machine. Thus the difficulties that have necessarily delayed integrated testing of breeder blankets, for example, were not faced in building TSTA in the late 1970's.

2. Facilities

2.1. Purpose

To meet the broad needs described in the Introduction, six specific objectives were incorporated into an initial mission statement for TSTA. These objectives have not changed since. The objectives of TSTA are:

(1) Demonstrate the fuel cycle for fusion power reactors;
(2) Develop and test environmental and personnel protection systems;
(3) Develop, test, and qualify equipment for tritium service in the fusion energy program;
(4) Provide a facility that can be used for demonstration and that can be copied for ETR, INTOR, (...ITER);
(5) Demonstrate long-term reliability of components and safe handling of tritium;
(6) Investigate system response to off-normal and emergency operations.

Although these objectives are clear and definitive, they have implications that warrant discussion. Some of these implications lead to project and facility characteristics that might not be immediately obvious in the consideration of technology R&D. For example, the requirement to provide a facility that can be copied (#4) implies the use of commercially available parts to the extent feasible. It also implies documentation of hardware descriptions and of its operation and maintenance. Demonstrating long-term reliability and safety (#5) implies extended operations and documentation of failure rates, accident rates, release rates, and worker exposures. Investigating off-normal and emergency operations (#6) implies the development of start-up and shut-down procedures, emergency procedures, and the handling of unexpected and unwanted situations. Certainly the goal is to minimize all defects and errors, and to show that errors and defects that do occur can be dealt with safely.

2.2. Role in fusion program

The role of TSTA is to provide the database, the technology, the facilities, and the operating experience and record mandated in the six objectives. In addition, TSTA and its staff provide tritium designs, consulting, and training to all parts of the U.S. fusion energy program.

Increasingly, TSTA is involved in international collaborations to provide similar services to the international fusion energy community in exchange for other fusion-related considerations of roughly equal value. TSTA is the only full-scale, integrated facility for fuel reprocessing in the world. It is the intent to use this resource for the maximum mutual benefit in a balanced and equitable international program to develop fusion energy while minimizing R&D costs to each country.

A major collaboration with the Japan Atomic Energy Research Institute (JAERI) began in 1987. The collaboration involves a five-year agreement between DOE and JAERI for the joint funding and joint operation of TSTA. Four Japanese scientists come each year for a full year of work at TSTA. The broad program for each year is reviewed and approved by a Steering Committee composed of two members from DOE and two from JAERI. More will be said about this collaboration in later sections of this article.

2.3. Major characteristics

The process flow loop is shown schematically in fig. 1.

The torus mockup is simply a vacuum tank into which can be injected the deuterium-tritium fuel mix and the impurities projected to make up the plasma exhaust gases from a reactor. The impurities can be gases such as methane, ammonia, water, helium, and oxides of carbon. The first three of these contain chemically-combined tritium. The Vacuum System is based

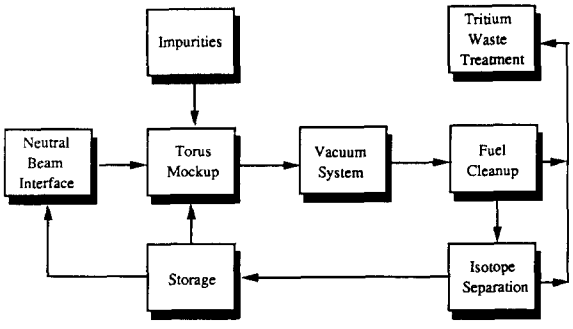

Fig. 1. Schematic diagram of TSTA process flow loop.

on compound cryopumps for evacuating the simulated spent fuel mix from the torus mockup. In the Fuel Cleanup System, the injected impurities (except helium) are removed from the hydrogen isotopes and are decomposed to recover the contained tritium and deuterium for reuse. The final processing step is the separation of the hydrogen isotopes and helium by means of fractional distillation carried out at liquid hydrogen temperatures (17–22 K).

The associated processes shown in fig. 1 include a storage system for the separated isotopes. This consists of five uranium beds, which are used primarily when operations are shut down, although they are also useful for scavenging small amounts of isotopes out of purge gases or other waste streams. The Neutral Beam Interface simulates the recovery of tritiated gases from the vacuum pumping of a neutral beam line.

The final block shown in fig. 1 is the Tritium Waste Treatment System. More than any other system perhaps, this system is central to the basic nature and purpose of TSTA. It is the effluent gas detritiation system. It is shown schematically in more detail in fig. 2.

Two points stand out in fig. 2. First, the effluent gas detritiation system is seen to be the final line of defense against emissions of tritium to the environment from all

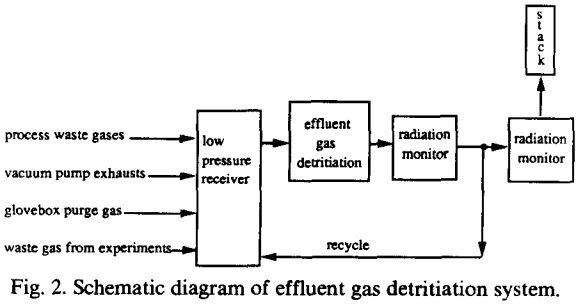

Fig. 2. Schematic diagram of effluent gas detritiation system.

sources at TSTA except a spill into the room itself. Second, for this reason it ties to, and therefore interties, all process systems and most safety systems at TSTA. Thus the effluent gas detritiation system plays a key part in tritium safety as well as in the need to do integrated testing – two major characteristics of TSTA.

The "recycle" stream shown in fig. 2 requires some explanation. If the effluent gas stream is not sufficiently detritiated (as shown by radiation monitoring) to be released to the stack, the stream is recycled to the system inlet for further detritiation. Final radiation monitoring, shown before the stack, can halt stack flow if detritiation is insufficient.

Two unusual characteristics of the facility and its staff are important to understanding the special resource represented by TSTA. For many reasons – including tritium at risk and required breeding ratio in the fusion breeding blanket – it is desirable to minimize the in-process inventory of tritium in the fuel reprocessing loop. A minimum in-process inventory is achieved by minimizing or eliminating tritium holdup in surge volumes. The result is a process loop that is more tightly coupled than is typical of chemical process designs. Minimum inventories require integrated testing of systems to develop and verify the special control schemes required.

Bringing TSTA to fruition profited by the availability of an uncommon resource. A majority of the system designers of TSTA had previous experience handling tritium in U.S. national security programs. Five of the principal designers had from 10 to 20 years experience handling tritium in gas form before the start of TSTA. Furthermore, these same individuals were used through all phases of conceptual design, process design, system specification and procurement, installation, commissioning, and developmental operations. We believe this unusual use of personnel played a significant role in bringing a highly specialized facility into nearly routine operation with a minimum of difficulty.

2.4. Construction history, status and scope

2.4.1. History

The TSTA project was awarded to Los Alamos National Laboratory in January 1977. A prerequisite for a successful proposal was the availability of a suitable building for housing the new facility. Decommissioning of unused equipment and preparation of the building began in early 1977. During the conceptual design stage of TSTA, annual design reviews were held that called on outside reviewers. These reviewers for the most part came from other DOE laboratories, and several had

many years of tritium experience. Thus, TSTA profited from a wide national base of practical experience and know-how.

All process designs and safety system designs were done in-house, that is, by the TSTA staff and other designers within Los Alamos Laboratory. Most of the systems were fabricated on-site from components specified and procured by Los Alamos. The mechanical design and fabrication of two process systems was done by commercial suppliers, following competitive bidding. These two systems were the isotope separation system (distillation columns), supplied by Arthur D. Little, Inc. of Cambridge, Massachusetts, and the fuel cleanup system, supplied by Grumman Aerospace Corp. of Bethpage, New York.

Major construction was completed in 1982. Following commissioning with deuterium and hydrogen, first tritium operations began in 1984 with 10 grams of tritium. Tritium in the systems was steadily increased until reaching its near-optium level of 110–130 grams (1.1–1.3 million curies) in June 1988.

As the tritium level was increased incrementally to its full value, subsystems were tested individually and gradually integrated into the full process loop. The first fully integrated operation of the TSTA loop took place in June 1988.

2.4.2. Present status of facilities

TSTA is now capable of full loop operation. In the past, loop operations have been 5–9 days in duration. In early May of 1989, we completed an extended operation of 19 days duration. A doubling of the number of facility operators (from 3 to 6) accomplished in the spring of 1989 will allow longer runs to start to test overall system reliability in long-term, continuous operation.

2.4.3. Scope of facilities

The total cost of designing, building, and commissioning TSTA (1977–1982) was $14.4 million. Roughly one-third of the total was TSTA staff time for design and oversight. An overall cost summary for TSTA is shown in table 1. Complete cost details have been published [1].

Fig. 3 is the facility floor plan. The main experimental room is shown in fig. 4. The main experimental room has 344 m^2 of floor space. Surrounding the main room is an additional 557 m^2 of floor space. This is used for the control room, equipment rooms, a gas analysis laboratory, an experimental contamination studies laboratory, and offices. The height of the main room is 8.0–8.5 m.

Table 1
Total cost summary for TSTA

Item	$ (thousands)
capital expenditures	6,791
laboratory capital overhead	286
installation	1,693
installation design and inspection	420
project staff (1977–82)	5,200
Total: design and major construction	14,420 = $14.4 million

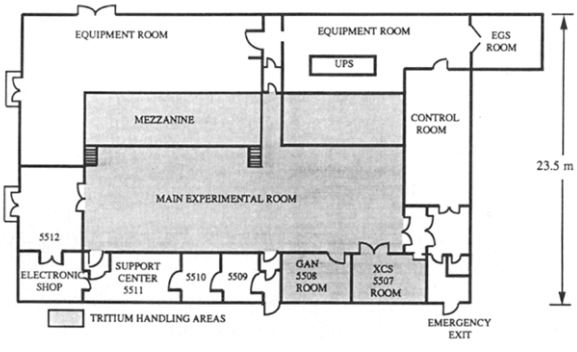

Fig. 3. Floor plan of the Tritium Systems Test Assembly.

Fig. 4. Photograph of main experimental room.

Besides the integrated fuel processing loop, the major testing resources also include five to six separate gloveboxes for carrying out individual component tests or tritium compatibility tests. The Experimental Contamination Studies Laboratory (labeled "XCS" in fig. 3) is a separate laboratory for research on the contamination and decontamination of materials and equipment of interest to fusion energy. Much research in collaboration with other U.S. and international programs has been done in the separate gloveboxes and the XCS.

2.5. Detailed description of facility

2.5.1. Equipment

2.5.1.1. Process systems – Equipment items that make up the integrated process loop (fig. 1) are essentially those initially installed in TSTA. Piping modifications have been made, small details and some small components have changed, and some small gas transfer pumps have been added for better control, but the processes are the same.

The Vacuum System for torus evacuation uses several designs of compound cryopumps. These involve chevrons cooled to liquid nitrogen temperature, condensation panels cooled to liquid helium temperature, and finally an adsorbent (molecular sieve or charcoal) cooled to liquid helium temperature. TSTA has the capability to test two such pumps at a time. A full operating fusion reactor could require as many as 32 such pumps for full flow. This step (torus evacuation) is thus the only step in exhaust gas reprocessing that is not incorporated in full size at TSTA. Other pump designs could be installed and tested at TSTA. The cryopump system is described in detail in the literature [2].

Between the Vacuum System and the Fuel Cleanup System is a small, but important, system designated the Transfer Pump System. This system includes a number of small metal bellows pumps and a tritium-compatible, nonlubricated scroll pump [3].

The Fuel Cleanup System (FCU) is the most complex chemical processing unit at TSTA. Its two main functions are to remove all impurities (except helium) from the fuel stream down to residual concentrations below 10 parts per million, and to decompose the impurities (by catalytic oxidation) to recover the chemically combined tritium for reuse. Further, the FCU includes two different technologies for the removal of impurities – (1) molecular sieve beds at liquid nitrogen temperature, and (2) hot uranium at 900°C. The flow schematic for the most successful of these, the cold molecular sieve beds, together with the technology for decomposing the impurities and recovering tritium, is shown in fig. 5.

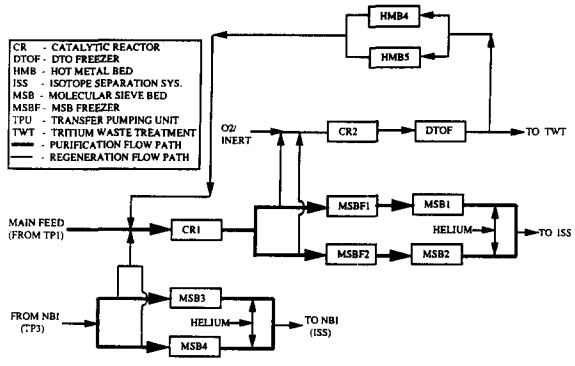

Fig. 5. Flow schematic of FCU process using cold molecular sieves.

The cyclic operation of this equipment is described in the literature [4]. A change in the system described in [4] is the elimination of the variable volume surge tank which does not appear in fig. 5. The 900°C uranium beds described in [4] have not worked as effectively as the molecular sieve beds, and are no longer used.

The Isotope Separation System (ISS) receives the purified stream from the FCU containing about 46–49 per cent tritium, 46–49 per cent deuterium, a few per cent of hydrogen (protium), and a small amount of helium (up to about 5 per cent).

The ISS (fig. 6) utilizes four interlinked, cryogenic distillation columns (4–5 m in height and 20–25 mm in diameter) and equilibrators to produce four product streams: (1) a stream of pure deuterium for feeding a neutral beam, (2) a stream of mixed tritium–deuterium for the main reactor feed, (3) a stream of pure tritium

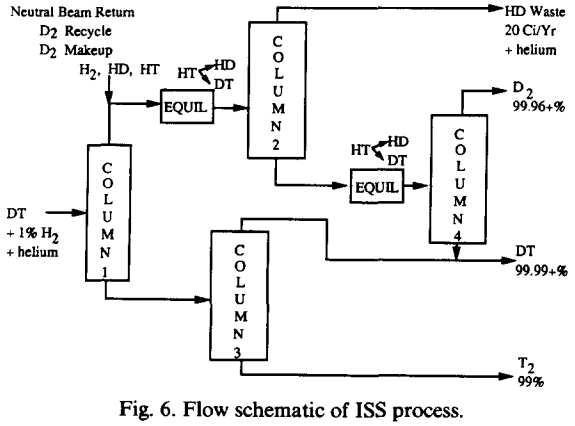

Fig. 6. Flow schematic of ISS process.

for possible use in a neutral beam or pellet injector, and (4) a waste stream of hydrogen-deuterium containing the waste helium and free of tritium. Further details of the ISS are available in the literature [5].

Gas analysis is an important part of operating and understanding the TSTA processes. The basic tool is gas chromatography. TSTA utilizes about 10 gas chromatographs on-line in various applications. Mass spectrometry and Raman analysis are available also to the project.

2.5.1.2. Safety systems – The effluent gas detritiation system, named the Tritium Waste Treatment System (TWT), is based on technology that was well-proved in U.S. national security programs before the inception of TSTA. The technology utilizes catalytic oxidation of elemental tritium in effluent gases followed by capturing of the resulting oxide on molecular sieve beds. TSTA also includes a larger system, based on the same technology, capable of detritiating the atmosphere in the main experiment room (see fig. 3) in the event of a tritium spill into the room. This larger system, the Emergency Tritium Cleanup (ETC), is designed to detritiate the main room to a level allowing normal entry within 24 hours after a spill of 100 grams of tritium. This system was installed as a test system at TSTA, not as an essential safety system. It certainly would be used in the event of a significant spill, which has not occurred to date.

Integral to overall facility safety and to the use of the room air detritiation system (ETC) is the automatic ventilation control system (VEN). This system has two main functions. The first is to maintain the pressure in the main experimental room slightly lower than that in the adjoining nontritium areas (the control room, offices, and equipment rooms in fig. 3). This pressure differential limits the movement of tritium from the main room in case of a release into the room. Secondly, in the event of a major spill in the main room, VEN automatically isolates the room atmosphere from its normal tie to the stack. This action permits effective detritiation by use of the ETC and in effect makes the building itself the tertiary containment for the tritium (process piping, glovebox, and building).

Besides the TWT and the ETC, the other systems at TSTA whose function is safety are the Tritium Monitoring System and the Secondary Containment System (SEC). TM is an extensive system of glovebox monitors, room monitors, and stack and duct monitors that warn of off-normal amounts of tritium in unwanted places. All of the tritium monitors at TSTA are of the ion-chamber type. SEC includes the gloveboxes and their controls. All piping that contains or may contain significant amounts of tritium is secondarily contained.

TSTA is designed as a fully computer controlled facility, as appropriate for a facility for developing technology ultimately to be interfaced with a fusion reactor. In addition to control, the computer system has a major function in recording and trending data and operating parameters. To date, the safety systems at TSTA (TWT, TM and SEC) are fully computer controlled, and have been since the initiation of tritium operations. The process systems (such as FCU and ISS) are operated through the computer by manual instructions from operators and by limited control programs for subsets of operations, generally related to safety and off-normal conditions.

TSTA includes considerable backup capability for the computer and its power supply. Two main computers are available at all times, with the standby computer ready to take over quickly in the event of control computer failure. An uninterruptible power supply (battery bank) is available, as well as a diesel-fired emergency generator ("EGS" in fig. 3).

2.5.2. Other resources

The staff of TSTA totals about 25 full-time people. These are categorized as follows: 8 permanent scientists and engineers, 4 visiting scientists from JAERI, 6 facility operators, 3 mechanical technicians, $1\frac{1}{2}$ electrical technicians, 1 software person, 1 quality assurance specialist, and 1/2 health physics technician. The professional staff includes chemists, physicists, chemical engineers, mechanical engineers, and health physicists. The facility operators often have a background with the U.S. Navy nuclear program.

Some support in health physics related to tritium handling is drawn from the infrastructure of Los Alamos Laboratory. Examples are the health physics technician, stack emission measurements, and the bioassay (urinalysis) program.

3. Operations and program

3.1. Technologies investigated

In large part the technologies investigated at TSTA are those described in the description of the facility. A very important TSTA technology that does not appear explicitly in the facility description might be termed "maintenance technology." That is, the techniques and apparatus that permit the modification and maintenance of tritium-contaminated equipment while avoid-

ing doses to workers and releases to the environment. TSTA has produced significant contributions to the fusion program in the category of maintenance technology.

In addition to the technologies comprising the integrated flow loop and its associated safety systems, a number of advanced components have been tested in individual, non-loop experiments. These have included: palladium alloy diffusion membranes for impurity removal, ceramic electrolysis cells for the decomposition of tritiated water, a catalytic decomposition process that might be used in conjunction with palladium diffusers, a tritium-compatible pellet injector, a tritium-compatible piezoelectric valve for gas injection into the torus, and a getter of potential application as a local glovebox atmosphere detritiation system. Other experimental projects have included studies related to the decontamination of room atmospheres, to the residual tritium content of molecular sieves used in tritium service, to alternative getter materials for the storage of tritium in solid form, and to the residual contamination of remote maintenance equipment used in tokamaks.

Generally the nonloop experiments have been done in collaboration with others, either from within the U.S. or abroad. Collaborators on the technologies mentioned above were JAERI, KfK Karlsruhe, Oak Ridge National Laboratory, the Princeton Plasma Physics Laboratory (PPPL), the Canadian Fusion Fuel Technology Project (CFFTP), Idaho National Engineering Laboratory, and the Joint European Torus (JET) Joint Undertaking.

3.2. Status of work

As of this writing in the spring of 1989, TSTA continues to evolve from a development and demonstration project with a large developmental aspect toward one with an increasing element of demonstration. The integrated process loop has been tested in its entirety and has been brought to a point where it does its job, although there remain some process deficiencies in need of attention.

One example is the regeneration of the DTO Freezer. This is a component in the Fuel Cleanup System that captures tritiated water by freezing. The device then must be warmed to recover the water and move it in a subsequent step for decomposition. Provisions for moving this water need improvement.

Although further process improvements will continue, by and large TSTA will move toward longer operations, more routine operations and a more complete transfer of facility operations to a larger staff of full-time operators. This spring the number of operators was doubled from three to six. This will bring with it an increased effort on operator training and technology transfer aspects.

TSTA has always had an important operator training program and a Quality Assurance program for producing operating and maintenance procedures. The early operations of TSTA were necessarily developmental in nature – fully involving the design team, management, and a few operators. Frequent modification of initial procedures was necessary and common. As more has been learned, more procedures have become standardized, and therefore more amenable to formalization and transfer. All this is consistent with the objectives and initial mission statement of TSTA.

The current collaboration and joint funding with JAERI will continue till June 1992. As a part of this collaboration, JAERI will bring to TSTA this fall a complete new fuel cleanup system of JAERI design and Japanese fabrication. The new system is based on palladium diffusers as the primary impurity separation technology, and it will utilize the ceramic electrolysis cell for water decomposition instead of the hot uranium beds currently used at TSTA.

The new system is scheduled to begin operations with tritium in the summer of 1990. As with all technologies, the relative advantages of alternative technologies for impurity removal will only be shown by integrated testing. The best option may be the one best able to recover from off-normal operations or perform best under emergency conditions. The best option may be the one easiest to operate, least prone to operator error, or easiest to maintain. This will be learned by integrated testing in the flow loop with the other steps of plasma exhaust gas processing.

3.3. Major results

This section will summarize the major lessons learned, important modifications from the original design, and broad conclusions. Experimental details can be found in the literature references provided [6–16]. Results will be summarized by subsystem. Cryopump technology has proved effective for torus evacuation. A major finding occurred recently when hydrogen isotopes and helium were successfully pumped for long periods of time on a single pumping surface. Previous designs utilized separate surfaces for the hydrogen isotopes and the helium. Confirmation of these results would lead to simpler pump designs. Such pumps could not be used to separate helium from the fuel stream. However other TSTA results have shown that helium can be effectively

removed without the loss of tritium by means of the cryogenic distillation system.

The principal finding from tests of the FCU is that cold (77 K) molecular sieve beds are an effective technology for removing impurities from the fuel stream. An alternative technology – hot (900°C) uranium beds – has not worked well and has been dropped from further consideration. Drawbacks of the uranium beds include poor reliability due to the high temperatures, tritium permeation due to the high temperatures, incomplete removal of the impurities, and the formation of solid waste.

From the first, the ISS has shown itself capable of making excellent separations between isotopes and producing very pure products (for example, 99.99 + % pure tritium). However considerable effort and auxiliary piping changes have been required to achieve good control and stability of operation. The most important of these has been the addition of two small metal bellows pumps in the top and bottom streams from the inlet column. Problems of cryogenic plugging of the inlet by condensable impurities have also occurred. Solutions include better purging techniques before startup, better understanding of interactions with the TWT, and the use of multiple inlets to columns. The ISS again illustrates a fundamentally sound process design, with the lessons learned from integrated testing being those of interactions with other subsystems, especially during startup, shutdown, and off-normal conditions.

The ISS also produced one of the major and successful unscheduled tests of emergency operations. During operations in June of 1987, the commercial cryogenic refrigerator that provides helium gas at 17 K to the ISS failed due to a broken crankshaft. At the time of the failure, the ISS contained its normal operating inventory of liquefied hydrogen isotopes, including about 75 grams of tritium. With loss of refrigeration, column pressures began to rise as the isotopes vaporized. The off-normal operating parameters were immediately detected by the computer control system and by the facility operators on duty. Column pressures reached a maximum of about 2.7 atmospheres before valves were opened between the columns and the uranium beds used for isotope storage. The uranium quickly took up the gas and reduced column pressures. Had the column valves failed to open, rupture disks would have relieved column pressures at about 4 atmospheres into a surge volume. Test pressure of the ISS was over 10 atmospheres.

The uranium storage beds used above have had one important modification made to improve their performance and usefulness. This was to add piping to allow more flexible operations. The piping added capability to recirculate gases over the beds, which gives better absorption of isotopes when inert gases (such as nitrogen or helium) are present. The modification also allowed waste gases to pass over the beds before being discharged to the TWT. By this technique, tritium was scavenged that had previously been sent to waste.

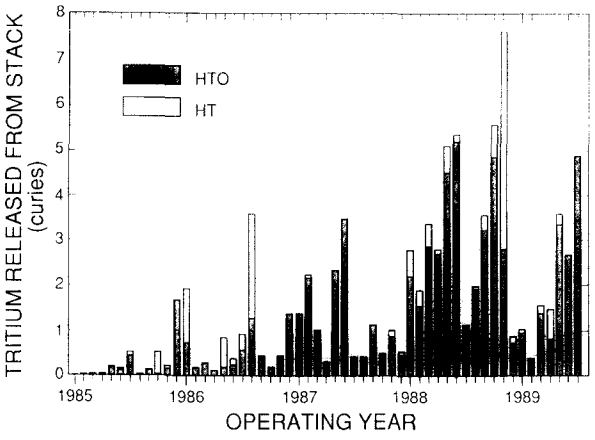

Fig. 7. Monthly releases of tritium from TSTA stack.

The TWT, effluent gas detritiation system, was one of the more mature technologies at TSTA at the time of installation. Consequently it has changed relatively little. What has been learned regarding the TWT primarily is its interactions with many other subsystems. The long-term effectiveness of the TWT in controlling emissions to the environment is shown in fig. 7.

The total release during the five years of tritium operation is less than 85 curies. This compares with the self-imposed goal of 200 curies per year, which in turn is well below any legal requirements of the EPA or DOE. Other aspects of tritium containment, worker exposure and waste generated, are summarized in table 2.

As previously mentioned, the other key fusion technology developed and demonstrated at TSTA is tritium

Table 2
Five-year tritium containment record at TSTA

HTO waste collected (on desiccant)	~ 32,000 Ci (in 35 gal drums)
Low-level waste (< 0.02 mCi/Cu m)	50 Cu meter (paper, etc.)
Stack releases	~ 85 Ci
Personnel exposure (~ 20 people/TSTA activities)	< 500 Pers-mrems [a]

[a] Allowable exposure to general public: 100 mrems/pers/yr.

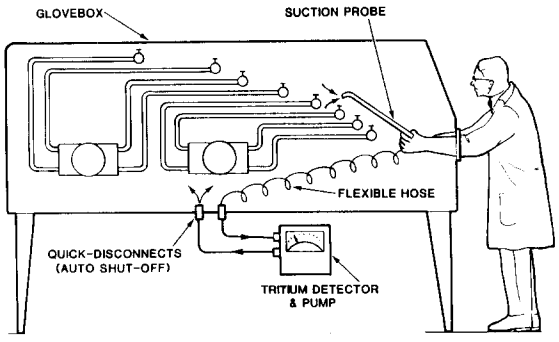

Fig. 8. Leak detecting in a glovebox with an external pump and monitor.

"maintenance technology." Again, the record of low stack emissions and worker exposures attests to the gains made in this area.

Two maintenance technologies are the portable ventilation duct (locally known as the "elephant trunk") and the tritium leak checking probe incorporated into every glovebox. The portable ventilation duct is a length of flexible ducting (perhaps 10–15 m long) whose downstream end is tied into the facility ventilation ducting to the main stack. By this means, local ventilation can be brought to any work site where tritium contamination may be present. The idea is the same as is practiced in a modern automotive repair garage: emissions are captured at the source with flexible hoses, rather than letting them into the room and trying to remove them from there. A further advance in this technology is to provide the capability to detritiate gases from the portable ventilation duct. This advance will be widely used in future tritium systems, such as for the Compact Ignition Tokamak (CIT) and ITER. Other advances in conjunction with the portable ventilation duct could include temporary shrouding of operations on contaminated equipment and premade port covers for small openings in the torus where maintenance might be done.

Tritium leak detecting at TSTA is facilitated by the technique illustrated in fig. 8.

3.4. Future plans

The directions of TSTA in the near term have been described already in this article. They are: (1) the installation and operation of a new version of the fuel cleanup system provided by JAERI, and (2) the move to longer periods of continuous operation utilizing a larger staff of full-time facility operators. These activities will take into 1992 and near the end of the current collaboration with JAERI.

Beyond this, plans are to study the effects on fuel systems of off-normal conditions in the torus. These would include startup, discharge cleaning, and accidents, including a plasma disruption and a rupture to room atmosphere.

In the longer term, the plan is to upgrade TSTA with the addition of a Breeding Blanket Interface (BBI). The Breeding Blanket Interface is the technology required to process the tritium-containing fluid product from a breeding blanket and produce a stream suitable for integration into the main fuel stream to be injected into the torus. This, together with the plasma exhaust reprocessing already done at TSTA, would complete the testing of all tritium processes required of a fusion machine, outside of the blanket itself.

Conceptual design work on a BBI has been under way since 1987 in collaboration with the blanket technology program at Argonne National Laboratory (ANL). ANL scientists and engineers have examined the requirements of a BBI for three blanket concepts – a liquid lithium blanket [17], an aqueous lithium salt blanket, and a solid ceramic breeder. In addition, the interface with a lithium–lead (Pb–17Li) blanket has been examined by KfK Karlsruhe.

The BBI selected for installation at TSTA will depend on international decisions and interest from such projects as ITER, FER, and NET. A BBI for more than one blanket could be built and tested. Plans for the BBI are not firm at this time and will depend, of course, on the availability of funding among other factors.

4. Summary

The Tritium Systems Test Assembly at Los Alamos National Laboratory is a full-scale, integrated test facility for the fuel processing technologies required for the next-step fusion machines, such as the International Tokamak Experimental Reactor (ITER). Since the beginning of tritium operations in 1984, up to 130 gram inventories of tritium have been used to test and verify both process and safety systems. The technologies, the operating and maintenance procedures, and the safety demonstration are the three major contributions from TSTA to the fusion energy program.

The technologies selected at TSTA have proved effective. As a result of integrated testing, some advanced alternatives have been developed, installed and tested. Other advances for use in future designs have been

indicated. Some of these are planned for integrated testing at TSTA in the next few years.

Increasingly, TSTA has been involved in collaboration with other fusion programs in the U.S. and abroad. By far the largest of these is a five-year agreement with the Japan Atomic Energy Research Institute providing for joint funding and joint operation of the facility from 1987 through mid-1992.

Tentative plans call for the installation and operation of a Breeding Blanket Interface at TSTA in the early 1990s.

References

[1] J.R. Bartlit, J.L. Anderson, and V.G. Rexroth, Subsystem cost data for the Tritium Systems Test Assembly, Proceedings of the 10th Symposium on Fusion Engineering, p. 1186–92, Philadelphia, December 5–9, 1983, IEEE Cat. No. 83CH1916-6 NPS.

[2] D.O. Coffin and C.R. Walthers, Vacuum pumping of tritium in fusion power reactors, Proceedings of the 8th Symposium on Engineering Problems of Fusion Research, p. 512–17, San Francisco, November 13–16, 1979.

[3] D.O. Coffin, A tritium-compatible high vacuum pumping system, Journal of Vacuum Science and Technology 20 (4) (April 1982) 1126–31.

[4] E.C. Kerr, J.R. Bartlit, and R.H. Sherman, Fuel cleanup system for the Tritium Systems Test Assembly: design and experiments, Proceedings of Tritium technology in Fission, Fusion and Isotopic Applications, p. 115–18, Dayton, April 29–May 1, 1980, CONF-800427.

[5] J.R. Bartlit, W.H. Denton, and R.H. Sherman, Hydrogen isotope distillation for the Tritium Systems Test Assembly, Proceedings of the 3rd Topical Meeting on Technology of Controlled Nuclear Fusion, p. 778–83, Santa Fe, May 9–11, 1978, CONF-780508.

[6] J.L. Anderson, et al., Experience of TSTA milestone runs with 100 grams-level of tritium, Fusion Technology 14 (2A) (1988) 438–43.

[7] M.A. Casey, K.M. Gruetzmacher, J.R. Bartlit, and L.C. Cadwallader, The data collection system for failure/maintenance at the Tritium Systems Test Assembly, Fusion Technology 14 (2B) (1988) 962–65.

[8] D.O. Coffin, The safety record at the Tritium Systems Test Assembly, Fusion Technology 14 (2B) (1988) 893–98.

[9] D.O. Coffin, S.P. Cole, and R.C. Wilhelm, A tritium compatible piezoelectric valve for the Tokamak Fusion Test Reactor, Fusion Technology, 14 (2B) (1988) 972–76.

[10] P.W. Fisher, S.L. Milora, S.K. Combs, R.V. Carlson, and D.O. Coffin, Tritium proof of principle pellet injector experiments, Fusion Technology 14 (2B) (1988) 977–81.

[11] R.H. Sherman, J.R. Bartlit, K.M. Gruetzmacher, H. Yoshida, T. Yamanishi, T. Naito, S. Hirata, and Y. Naruse, Operation of the TSTA isotope separation system with 100 grams of tritium, Fusion Technology 14 (2B) (1988) 1273–76.

[12] T. Yamanishi, H. Yoshida, S. Hirata, T. Naito, Y. Naruse, R.H. Sherman, J.R. Bartlit, K.M. Gruetzmacher, and J.L. Anderson, Single-column and two-column H–D–T distillation experiments at TSTA, Fusion Technology 14 (2A) (1988) 489–94.

[13] J.R. Bartlit and J.L. Anderson, The Tritium Systems Test Assembly: overview and recent results, Fusion Technology 1988, Proceedings of the Fifteenth Symposium on Fusion Technology, Utrecht, The Netherlands, 19–23 September, 1988 (1989) 1354–59.

[14] A. Tesini and R.A. Jalbert, Experimental contamination and decontamination studies on JET remote handling tools and materials when exposed to tritium, Joint European Torus report JET-R (88) 18, 1988.

[15] G.R. Longhurst, R.A. Jalbert, and R.L. Rossmassler, Atmospheric detritiation system performance, Fusion Technology 15 (2B) (1989) 1331–36.

[16] P.A. Finn, S. Willms, A. Busigin, and K.M. Kalyanam, Tritium module for ITER/TIBER system code, Fusion Technology 14 (2A) (1988) 677–82.

[17] R.G. Clemmer, P.A. Finn, T.L. Grimm, D.K. Sze, J.L. Anderson, J.R. Bartlit, Y. Naruse, and H. Yoshida, The blanket interface to TSTA: requirements for liquid lithium blanket processing systems, Fusion Technology 14 (2A) (1988) 657–62.